COMPLETE OVERVIEW



Mixing- and injection technology

GROUTING SYSTEMS HÄNY

Häny AG
Buechstrasse 20
CH-8645 Jona
Switzerland

Phone +41 44 925 41 11
Fax +41 44 923 62 45

E-Mail mitinfo@haeny.com
Web www.haeny.com

Häny AG –
Your best partner
for mixing and
injecion technology.

Modern mixing and injection technology

Overview

Table of contents

Product overview ..... 4 – 5
Technology ..... 6 – 7
HCM High shear mixers 8
HRW Agitators 9
ZMP Grout pumps ..... 10 – 15
Compact grout plants ..... 16 – 17
Automatic systems ..... 18 – 21
Registration ..... 22 – 23

Sabina Häny
CEO

Häny AG –
Your best partner
for mixing and
injecion technology.

Product overview

Häny mixing and injection technology (MIT)

If the site, rock or tunnelling needs to be strengthened or sealed. Where anchoring guarantees the required safety for routes and constructions. Where a difficult site becomes suitable for building thanks to modern construction techniques: Häny is involved everywhere – ensuring safety.

Before planning…
Rationally implementing more complex construction projects above all requires efficient use of resources as well as optimal planning. Häny's specialists are happy to support you in this phase and offer integrated system solutions for your problems.

… up to application
The Häny product range includes components such as turbo mixers, agitators, injection pumps, pressure and volume recording systems that can be grouped in overall systems with an integrated control system and installed in containers or for stationary use. Häny machines are characterised by their simple operation, good cleaning options, robust construction and extremely low maintenance and upkeep costs.

Häny speciality
New binding agents (cement) are continuously being developed to meet today's industrial requirements; they are also far more environmentally-friendly than the chemical substances used previously.
However, these binding agents also require a new mixing process. Häny has continuously optimised its turbo mixing process with the exclusive Häny vortex impeller and has thus become a powerful market player in the processing of cement, betonite and fine binding agent suspensions.

Convincing systems and devices
Häny is your global partner for modern mixing and injection technology. We work wherever the site, rock, anchoring or tunnelling needs to be strengthened or sealed.

GROUTING SYSTEMS HÄNY

Arrowhead, San Bernadino California, USA

Häny customers have the following advantages:

- Individual, inexpensive system configurations
- Expert advice and a high level of flexibility
- Low wear and low maintenance costs
- High-quality and user-friendly products

Häny mixing and injection technology offers systems for:

Soil improvement
- Sleeve pipe injections • Soil mix processes • Injection shields

Tunnel construction
- Injections for strengthening and compacting the substrate • Pipe shield injection
- Grout/2-component backfilling injection • Contact injection

Anchoring
- Ground and rock anchors • Soil nailing • Drilling anchors

Trenchless construction
- Pipe thrusting • Microtunnelling • Directional drilling

Special civil engineering
- Diaphragm and narrow wall construction • Pile foundations

Pre-stressed concrete
- Injection of cable ducts

You will also find all the important information on www.haeny.com

Häny AG –
Your best partner
for mixing and
injecion technology.

Technology

Intensive mixing action provided by the high capacity mixing pump

Mixing principle

The key to a successful mixing of water with cement, ultra-fine cement, bentonite etc, is the creation of high shear forces in the mixer to separate the particles.
The Häny range of high shear colloidal mixers use high speed mixing pumps and the unique Häny vortex impeller. The high capacity mixing pumps circulate the entire tank content 2 to 4 times per minute, depending on the size of the mixer. The vortex impeller creates an extremely high turbulence in the pump housing.
This turbulence with its high hydraulic shear forces separates the individual particles from one another and thus is responsible for a thorough hydration of the mix. The result is a stable suspension of excellent workability. Difficult-to-mix admixtures such as ultra-fine cement or bentonite can be mixed superbly in a very short time. Using the HCM high shear colloidal mixer eliminates the need for pre-soaking bentonite or providing storage tanks.

Mixing pump

Due to the hydraulic creation of the necessary shear forces-there are no close tolerances in the pump housing. As a result, disadvantages such as high wear and clogging by larger particles are virtually nonexistent. Depending on the size of the Häny vortex impeller pump, the free passage through the pump can range from 15 to 80 mm.
The extremely tough material of the Häny vortex impeller guarantees long life. This special material and the large passage allow the models HCM 300 and HCM 600 to mix sanded grouts of up to 8 mm particle size. The maintenance free shaft seal is grease lubricated, and will withstand a dry running period of the pump of several minutes without damage.

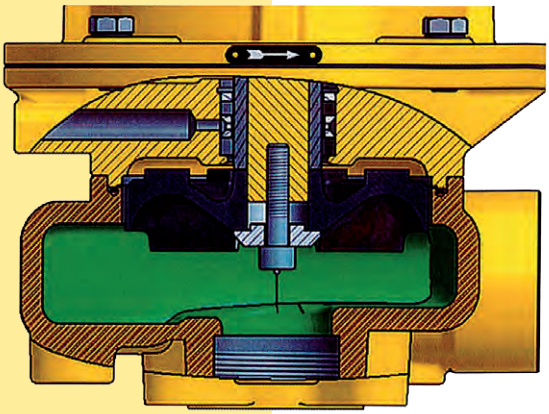

Mixing pump cross-section

GROUTING SYSTEMS HÄNY

Water tunnel between Rajo-Chope mine, Chile

The plunger pump system

The difference between the plunger and the piston pump system is that the plunger system does not require any close tolerance parts such as cylinders or precise piston seals, etc. The plunger is sealed by a simple maintenance-free seal. Plungers with various diameters can be mounted on the ZMP 700 series of pumps. This grants the highest possible pressure and output ranges flexibility for each individual model.

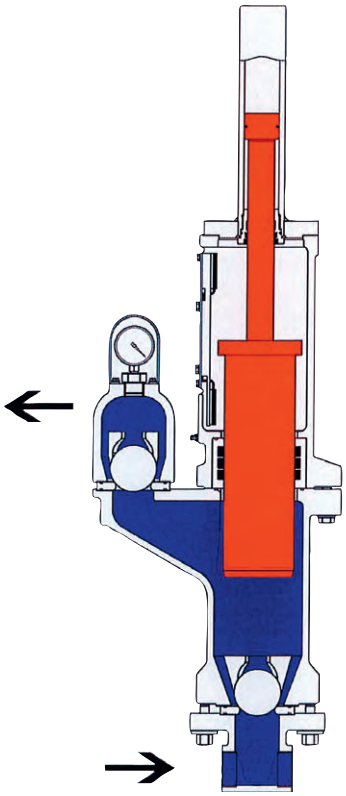

Plunger pump cross-section

Valves

The grout valves are made of high grade alloy steel for long life. The valve seats are reversible. The special design of the hydraulic system provides for a high speed suction stroke of the plunger, which creates a relatively high grout velocity in the suction valves. Thus, heavy particles will be flushed away and the valves are kept clear.
Suspensions with low water/cement factors and high proportions of sand are part of the wide range of applications for these pumps.

Automatic pressure control

The ZMP 700 pumps are equipped with control valves which allow precise pre-setting of the maximum grout pressure. When the pre-set pressure is reached, the pump delivers only as much grout as the injection point will take at the pre-set pressure. If there is no more grout take, the pump auto matically stops and maintains the pressure for any time period. Low pressures of only 1 bar can be pre-set on some models. The APC system guarantees safe grouting of delicate formations without risking hazardous overpressure.

Flow control

The built-in flow control permits the setting of a maximum flow rate. With this feature, slow penetration of soft ground can be achieved without risking segregation of the grout or creating new voids.
The flow control together with the pressure control system allows the use of these pumps for permeability tests.

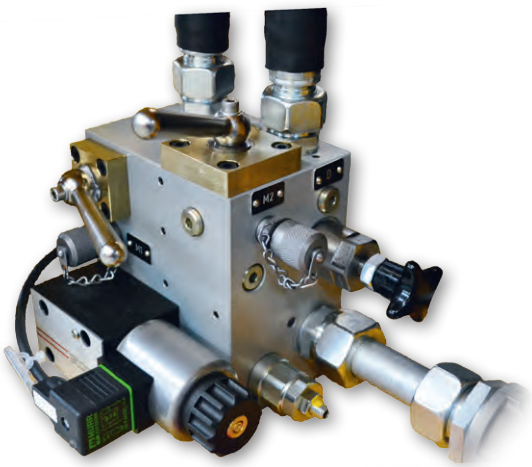

Hydraulic control block

Häny AG –
Your best partner
for mixing and
injecion technology.

HCM
High shear mixers

Easy maintenance through vertical arrangement of the mixing pump

Mixing tank

The eccentrically shaped bottom cone of the tank breaks the vortex created by the intensive circulation of the mix. This eliminates any difficult-to-clean baffles.
A grease lubricated 3-way valve, specially designed for cement applications, allows either mixing (circulation) or transfer of the mix to a holding tank (agitator). The smaller units (up to HCM 600) can be equipped either with manual operation or automatic water meters for exact dosing.
The tank covers of larger mixers are equipped for connection to screw conveyors and replacement of the manual 3-way valve with pneumatic pinch valves.

Automatic batching

For automated operation, the mixers can be equipped with load cells that will weigh all components directly in the mixer.
The distinct advantages of this system are the space saving and easy transportation of the unit without having to detach the weighing scale.

HCM		100	300	600	800	2500
Mixing pump	Type	TMP 9	TMP 22	TMP 22	TMP 40	TMP 60
Production approx. (W/C ratio = 1)	m^3/h l/min	2 33	5 83	8 133	20 333	40 667
Circulation capacity	l/min	540	1400	1400	2400	4800
Usable content	l	100	260	550	800	2500
Max. particle size	mm	5	8	8	3	–
Electric motor 50 Hz	kW	3	9.2	9.2	22	45
60 Hz	kW	3.6	10.5	10.5	25	53

GROUTING SYSTEMS HÄNY

HRW Agitators

HRW agitators

The Häny HRW agitators are used as holding tanks between a batch mixer and the grout pump. This guarantees continuous operation. In the agitator the mix is homogenized and air bubbles are removed by a slowly revolving agitator. The agitator paddle is mounted at an angle to ensure circulation of the entire tank content. This mounting arrangement prevents the mix from revolving in the tank so that there is no need for static baffles which are difficult to clean.
The agitators can be equipped with level probes to control automatic mixing cycles in response to consumption.

HRW 350

HRW			150	350	800	1200	2000	3000
Usable content		l	150	350	800	1050	2000	3000
Electric motor	50 Hz	kW	0.55	0.55/1.1	0.55/1.1	1.5	3	3
	60 Hz	kW	0.66	0.66/1.3	0.66/1.3	1.8	3.6	3.6
Agitator speed	50 Hz	min^{-1}	690	47	47	26	26	26
	60 Hz	min^{-1}	830	56	56	31	31	31

Häny AG –
Your best partner
for mixing and
injecion technology.

ZMP
Grout pumps

ZMP 610V
Single plunger

Efficient methods

Häny injection pumps are available as single- or double-acting, vertical plunger pumps. Great importance is placed on simple maintenance, high resistance to wear and simple cleaning options for the ZMP pumps. Today, with the latest developments in equipment technology and building materials, injection is recognised as an efficient method for treating soil and rock.

- Suspensions with a low water/cement factor and screeds with a grain size up to 8 mm can be pumped.
- The ZMP is equipped with an infinitely adjustable pressure and volume regulating valve
- Once the defined end pressure is reached, the pump automatically stops and holds the specified pressure without any fluctuations in order to ensure that the injection site is completely filled.
- Different plunger units are available for covering as large a pressure and volume range as possible.
- Simple handling for operation and maintenance, low wear, high quality standards and safety.

GROUTING SYSTEMS HÄNY

Abdalajis Tunnel, Malaga Spain

ZMP 600 single and double plunger

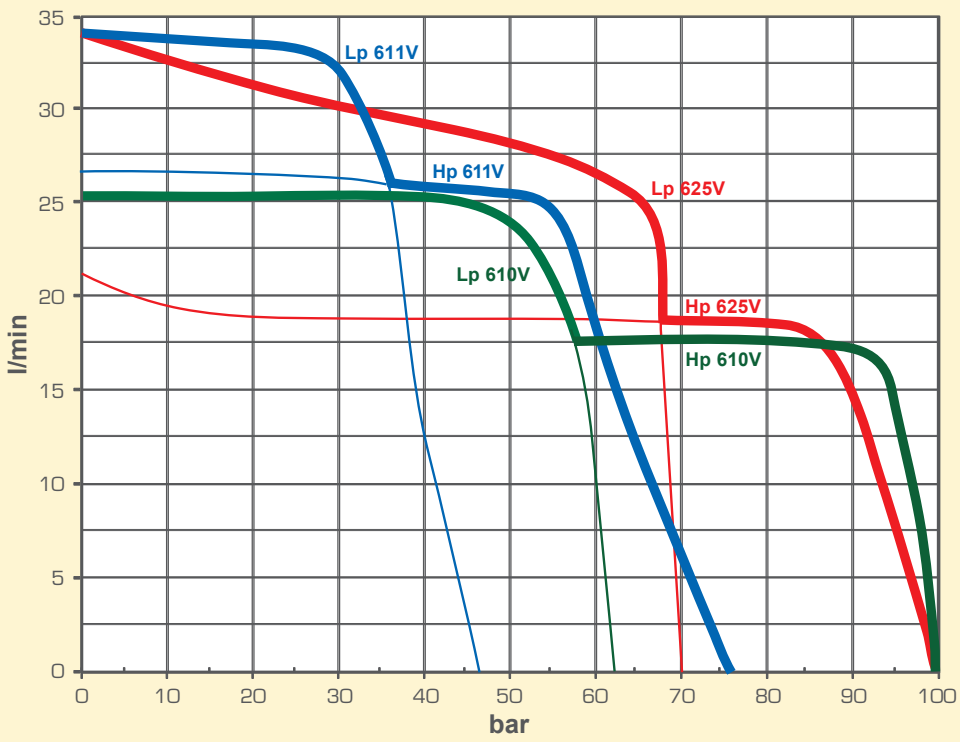

Lp = Low pressure **Hp = High pressure**

ZMP 625V
Double plunger

ZMP 600		610V	611V	625V
Type		**Single plunger**	**Single plunger**	**Double plunger**
Plunger ø	mm	65	65	65
Capacity max. (W/C ratio = 1)	m^3/h l/min	1.5 25	2 33	2 33
Pressure max.	bar	100	75	100
Pressure min.	bar	1*	1*	1*
Particle size max.	mm	5	5	5
Electric motor 50 Hz	kW	5.5	5.5	5.5
60 Hz	kW	6.3	6.3	6.3

* With low pressure option

Häny AG –
Your best partner
for mixing and
injecion technology.

ZMP
Grout pumps

ZMP 710V
Single plunger

ZMP 712V
Single plunger

ZMP 700 single plunger

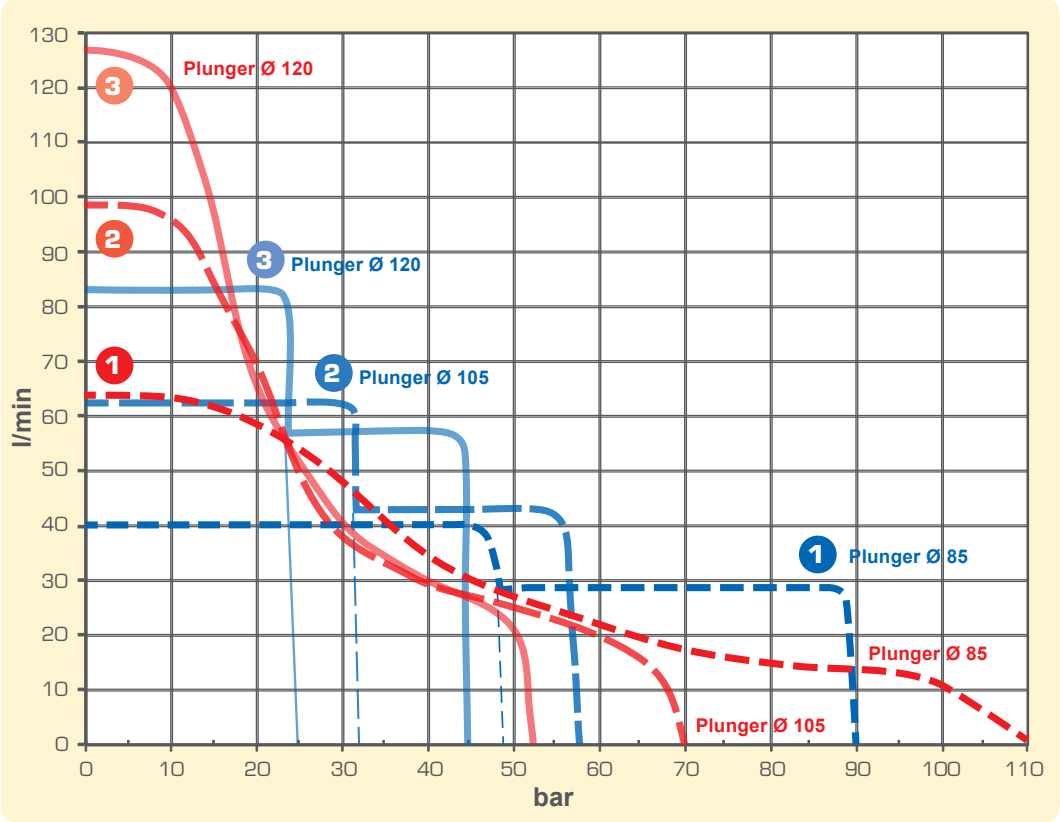

ZMP 700		710V			712V		
Graph no.		1	2	3	1	2	3
Plunger ø	mm	85	105	120	85	105	120
Capacity max. (W/C ratio = 1)	m^3/h	3.9	5.5	7.5	2.4	3.8	4.9
	l/min	65	92	125	40	63	82
Pressure max.	bar	100	68	50	88	58	44
Pressure min.	bar	2*	1.5*	1*	2.5	2	1.5
Particle size max.	mm	8	8	8	8	8	8
Electric motor 50 Hz	kW	7.5	7.5	7.5	7.5	7.5	7.5
60 Hz	kW	8.6	8.6	8.6	8.6	8.6	8.6

* With low pressure option

GROUTING SYSTEMS HÄNY

Logan Martin Dam, Alabama, USA

ZMP 700 double plunger

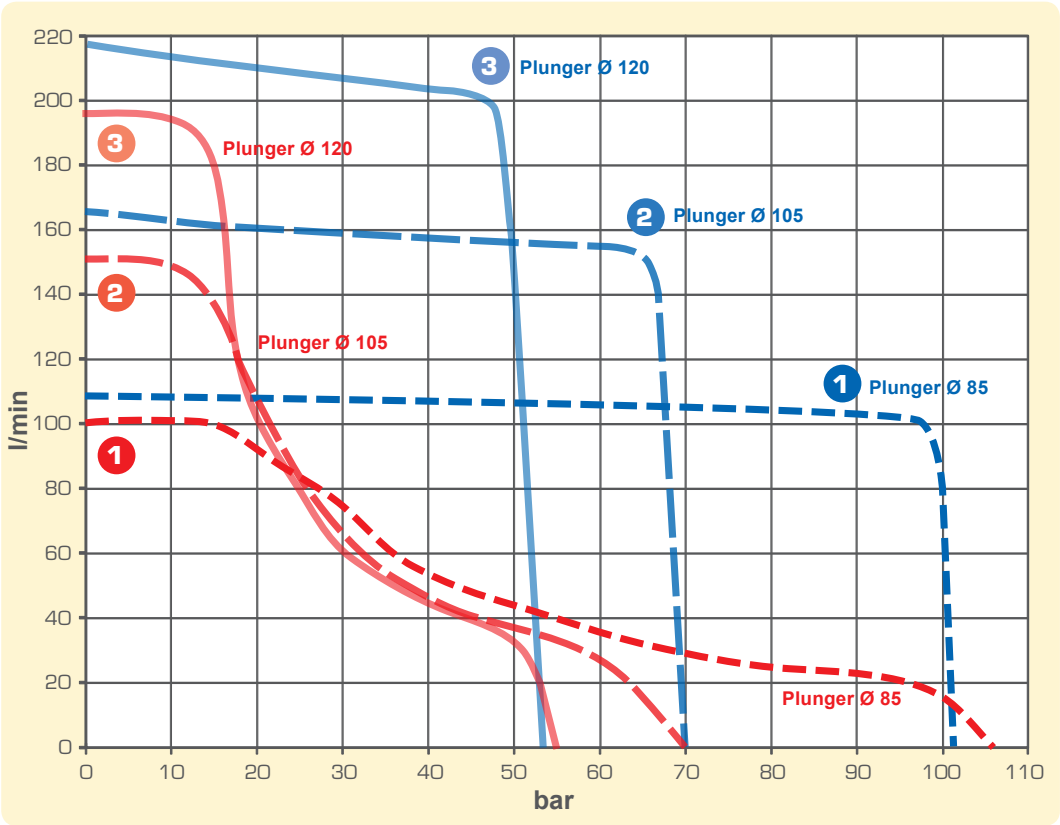

ZMP 725V / 726V
Double plunger

ZMP 700			725V			726V		
Graph no.			1	2	3	1	2	3
Plunger ø		mm	85	105	120	85	105	120
Capacity max. (W/C ratio = 1)		m^3/h l/min	5.9 98	9 150	11.7 195	6.5 108	9.9 165	13 217
Pressure max.		bar	100	68	50	100	68	50
Pressure min.		bar	2*	1.5*	1*	8	5	4
Particle size max.		mm	8	8	8	8	8	8
Electric motor	50 Hz	kW	9.2	9.2	9.2	30	30	30
	60 Hz	kW	10.6	10.6	10.6	34.5	34.5	34.5

* With low pressure option

Häny AG –
Your best partner
for mixing and
injecion technology.

ZMP
Grout pumps

ZMP 900 Triplex

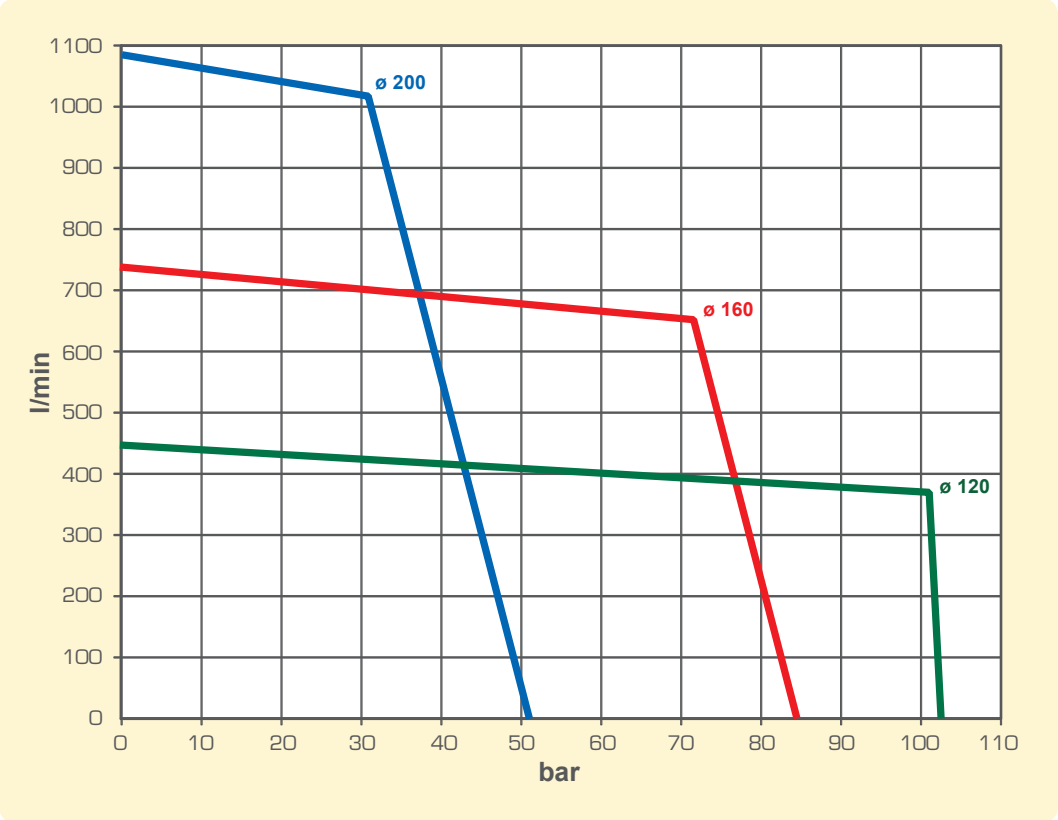

ZMP 900		936V		
Plunger ø	mm	120	160	200
Capacity max. (W/C ratio = 1)	m^3/h l/min	22 366	39 651	61 1017
Pressure max.	bar	100	70	30
Pressure min.	bar	1	1	1
Particle size max.	mm	8	8	8
Electric motor 50 Hz	kW	90	90	90
60 Hz	kW	108	108	108

GROUTING SYSTEMS HÄNY

Hoyerswerda, Germany

ZMP 900
Triplex

Häny AG –
Your best partner
for mixing and
injecion technology.

Compact grout plants

IC 1100 / 712V

User-friendly systems – for mixing and injection work

The economic Häny INJECTO-COMPACT (IC) plants are suitable for any grouting work such as tie back anchors, tube à manchette, contact grouting, etc. The IC plants consist of the standard components HCM mixer, HRW agitator and ZMP grout pump.
All components are arranged in a user-friendly manner, and easy to remove; central suspension makes it easier to move the system.

Installation on TBM, water tunnel, Lanzhou China

GROUTING SYSTEMS HÄNY

Plovdivci Dam Rudozem, Bulgaria

IC 300 serie with HCM 100 and HRW 150

INJECTO-COMPACT IC			310	311	325
Grout pump		ZMP	610V	611V	625V
Capacity max. (W/C ratio = 1)		m^3/h l/min	1.5 25	2 33	2 33
Pressure max.		bar	100	75	100
Electric motor	50 Hz	kW	9.1	9.1	9.1
	60 Hz	kW	10.5	10.5	10.5

IC 310

IC 650 serie with HCM 300 and HRW 350

INJECTO-COMPACT IC			650	650	650
Grout pump		ZMP	710V	712V	725V
Capacity max. (W/C ratio = 1)		m^3/h l/min	5 83	4.9 82	5 83
Pressure max.		bar	100	88	100
Electric motor	50 Hz	kW	17.5	17.5	19
	60 Hz	kW	20	20	22

IC 650

IC 1100 serie with HCM 300 and HRW 800

INJECTO-COMPACT IC			1100	1100	1100	1100
Grout pump		ZMP	710V	712V	725V	726V
Capacity max. (W/C ratio = 1)		m^3/h l/min	5 83	4.9 82	5 83	5 83
Pressure max.		bar	100	88	100	100
Electric motor	50 Hz	kW	17.5	17.5	19	40
	60 Hz	kW	20	20	22	47.5

IC 1100/712V

IC 1400 serie with HCM 600 and HRW 800

INJECTO-COMPACT IC			1400	1400	1400	1400
Grout pump		ZMP	710V	712V	725V	726V
Capacity max. (W/C ratio = 1)		m^3/h l/min	7.5 125	4.9 82	8 133	8 133
Pressure max.		bar	100	88	100	100
Electric motor	50 Hz	kW	17.5	17.5	19	40
	60 Hz	kW	20	20	22	47.5

IC 1400

Häny AG –
Your best partner
for mixing and
injecion technology.

Automatic systems

IC 650 / 725

High performance – for stationary or mobile use

The automatic system provides other advantages on top of the enormous savings in terms of personnel costs:
High production output, quality monitoring and more pleasant working conditions are just some of the benefits that make the use of such systems an economic necessity today. The systems can be designed for stationary use (e.g. injection centres) containerised for mobile use.

- Various automation standards are available, such as semi-automatic or fully automatic systems.

Fully automated grout plant type IC 1400 / 725A,
Installation in the netherlands

GROUTING SYSTEMS HÄNY

Injection platform, Hallandsas, Sweden

IC 650A serie with HCM 300 and HRW 350

INJECTO-COMPACT IC			650A	650A	650A
Grout pump		ZMP	710V	712V	725V
Capacity max. (W/C ratio = 1)		m^3/h l/min	5 125	4.9 82	5 133
Pressure max.		bar	100	88	100
Electric motor	50 Hz	kW	17.5	17.5	19
	60 Hz	kW	20	20	22

IC 650

IC 1400A serie with HCM 600 and HRW 800

INJECTO-COMPACT IC			1400A	1400A	1400A	1400A
Grout pump		ZMP	710V	712V	725V	726V
Capacity max. (W/C ratio = 1)		m^3/h l/min	7.5 125	4.9 82	11.7 195	12 200
Pressure max.		bar	100	88	100	100
Electric motor	50 Hz	kW	17.5	17.5	19	40
	60 Hz	kW	20	20	22	47.5

IC 1400A

Häny AG –
Your best partner
for mixing and
injecion technology.

Automatic systems

Portable mixing plants

The mobile mixing systems MCM 2000 and MCM 5500 are suitable for preparing fly ash, bentonite, cement and stone filler, clay and similar suspensions. Typical applications include: preparing the A mixture components for 2-component backfilling, preparing diaphragm wall suspension, jet grouting applications or larger injection projects.

Example: mixing cycle of a MCM 5500

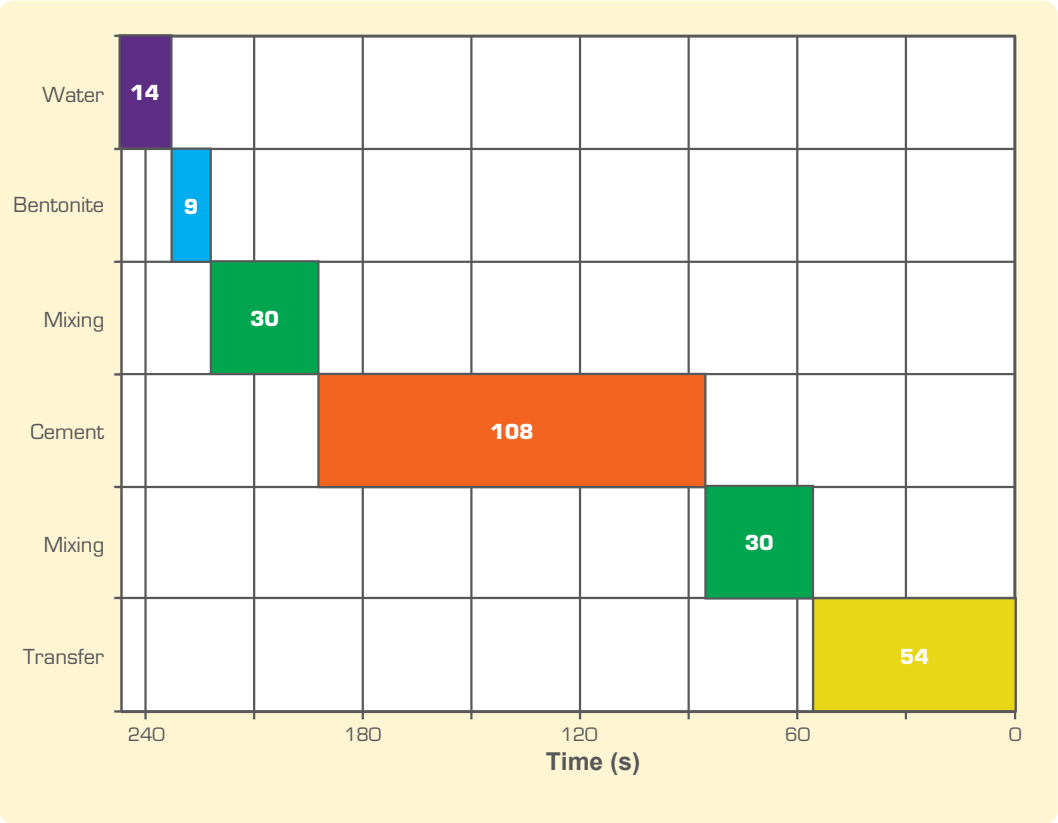

GROUTING SYSTEMS HÄNY

Mixing system for 2-component backfilling, Belchentunnel, Switzerland

MCM 2000 with HCM 800 and HRW 1200

MCM 2000	
Capacity	12 – 25 m^3 / h depending on the type and composition of the mix
Batching accuracy (weighing)	< ±3 %
Power rating	ca. 25 kW (without screw conveyors)
Circulation capacity of mixing pump	> 40 l/s
Dimensions	3000 x 2400 x 2600 mm
Weight	ca. 3300 kg

MCM 2000 Metro
Bangladore
India

MCM 5500 with HCM 2500 and HRW 3000

MCM 5500	
Capacity	25 – 45 m^3 / h depending on the type and composition of the mix
Batching accuracy (weighing)	< ±3 %
Power rating	ca. 50 kW (without screw conveyors)
Circulation capacity of mixing pump	> 70 l/s
Dimensions	6000 x 2440 x 2600 mm
Weight	ca. 9500 kg

MCM 5500 Tunnel
Albaufstieg
Germany

Häny AG –
Your best partner
for mixing and
injecion technology.

Registration

DPV-H

DPV-H – display and simple control of flow, pressure and volume

The display and the continuous monitoring of key parameters often proves to be essential for proper conduct of operations during critical phases.

Rugged and readable, with an updated user-friendly interface, the DPV-H is an effective and easy to use solution for the display and control of pressure, flow and volume.

- simple and user friendly interface,
- Display pressure, flow and volume,
- Control of pressure and fl ow following scheduled values,
- Data recording (USB),
- Wireless coupling (Bluetooth) possible with a Dialog for an advanced control.

GROUTING SYSTEMS HÄNY

Soil mixing, Bangkok

Measuring, controlling and recording injection parameters

DIALOG PVD

The DIALOG in PVD version is an instrument for measuring, driving and recording injection parameters.
Its user friendly interface allows to use it simply for measuring and recording parameters of pressure, flow,volume or extend its use in controlling pumps, to regulate the pressure and fl ow, and control/monitoring of complex instructions. The DIALOG can control and manage up to 4 pumps.

DIALOG PVD

CINTAC

The CINTAC 15 is an instrument for measuring, controlling and recording of injection parameters.
Featuring a large touch screen with a graphical and intuitive interface, its use extends from the measurement and recording of parameters pressure, fl ow, volume, to the control of pumps, the regulation of pressure and flow, the control/monitoring of complex instructions. The CINTAC can control and manage up to 12 pumps.

CINTAC

Types of measurements of DIALOG PVD and CINTAC

- Average/instant pressure,
- Flow and Volume,
- Recording function of time and events,
- Sleeves profi les (numbered, rating sizes ...),
- Events described by the operator,
- External events captured (lifting, ...).

Sales partners:

PM2-101503.00 / 03.16

GROUTING SYSTEMS HÄNY

Häny AG · Buechstrasse 20 · CH-8645 Jona/Switzerland
Phone +41 44 925 41 11 · Fax +41 44 923 62 45 · mitinfo@haeny.com · www.haeny.com